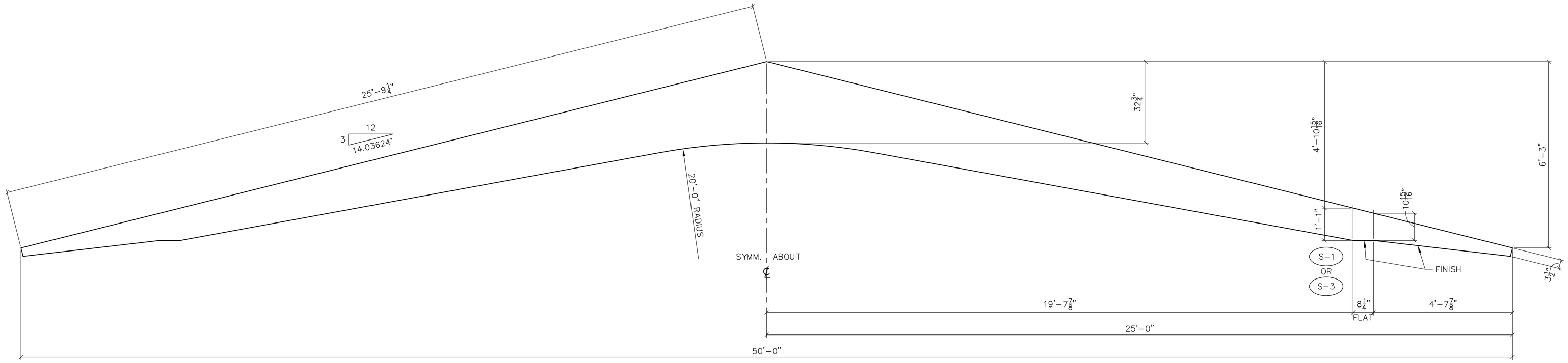

CURVED BEAM CB-1 5" x VARIES 11-req'd.
24F-V3

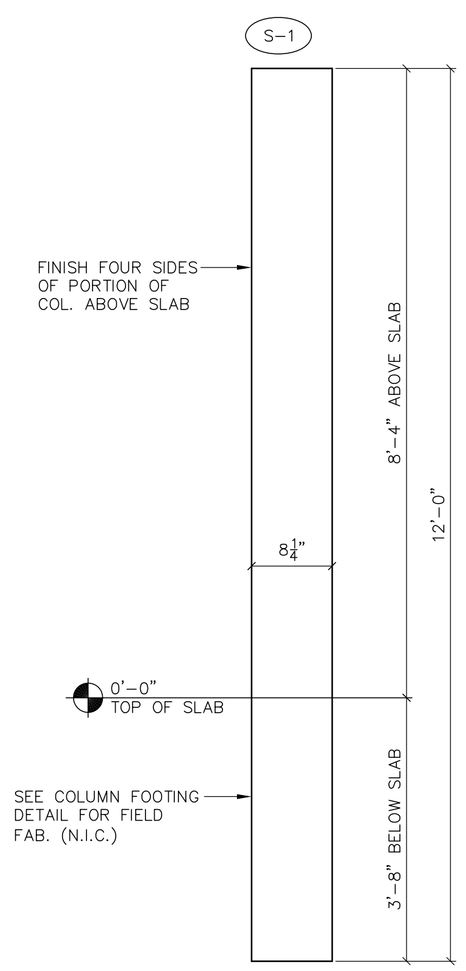

COLUMN C-1 5" x 8 1/4" 8-req'd.
24F-V5
TREATED

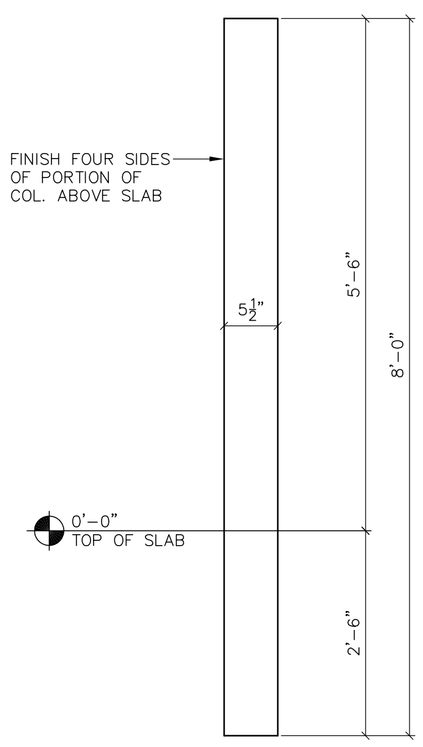

COLUMN C-2 5" x 5 1/2" 4-req'd.
47(1:8) w/o T. LAMS
TREATED

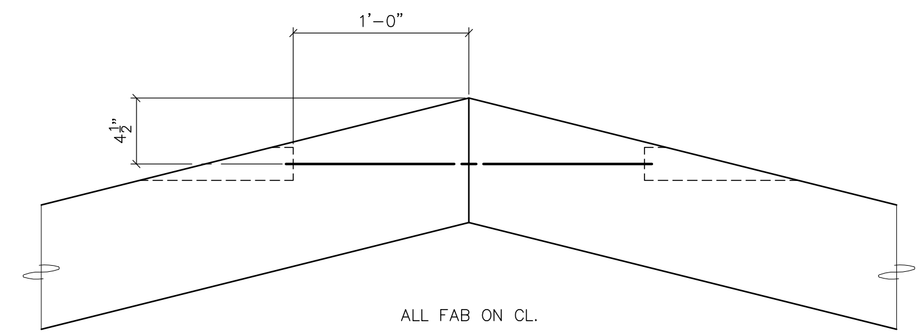

CONN S-2 2-req'd.

1 - 3/4"ø x 26" THREADED ROD
2 - 3/4"ø HEX NUT
2 - 3/4"ø WASHER

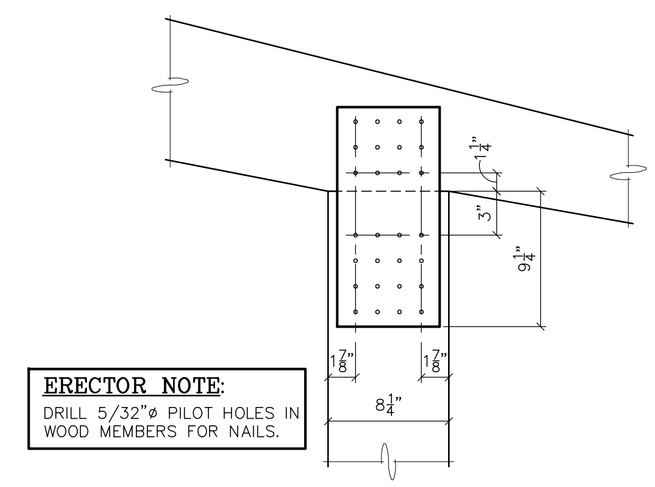

ERECTOR NOTE:
DRILL 5/32"ø PILOT HOLES IN WOOD MEMBERS FOR NAILS.

CONN S-1 8-req'd.

2 - MK-1 PLATE (SP000007x15A00.2500)
56 - 4 GA. x 2 1/2" ANNULAR RING NAIL, GALV.

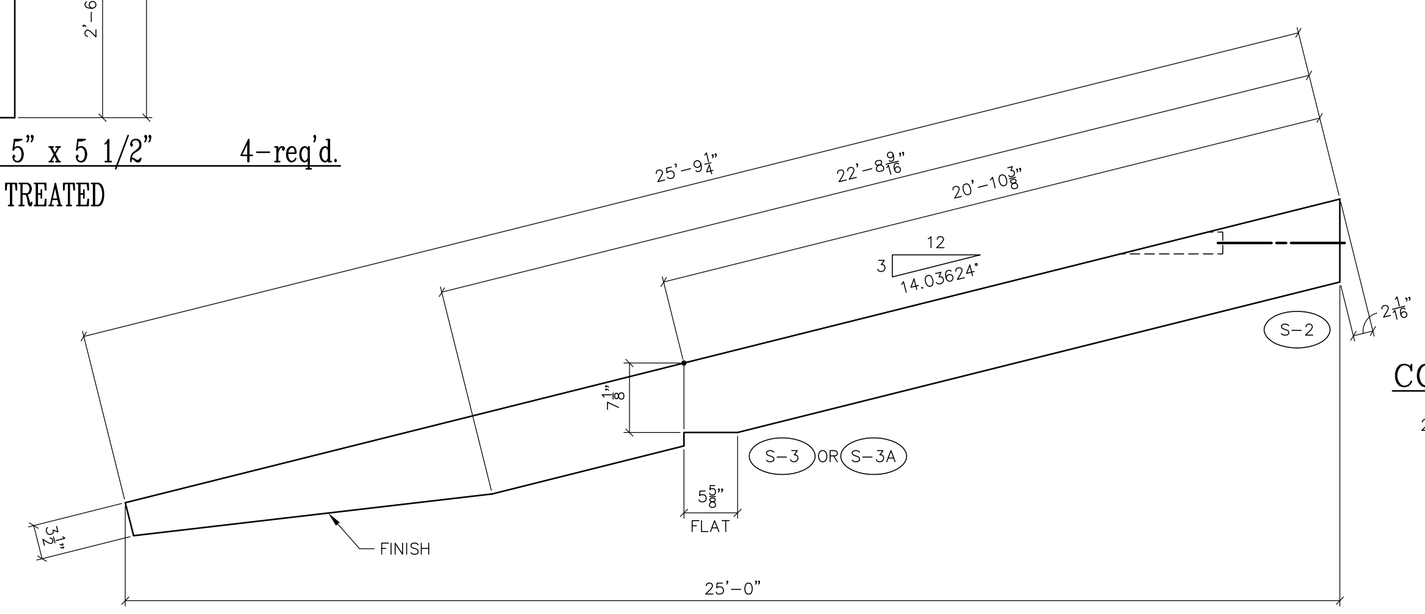

RAFTER R-1 5" x 8 1/4" 4-req'd.
24F-V3

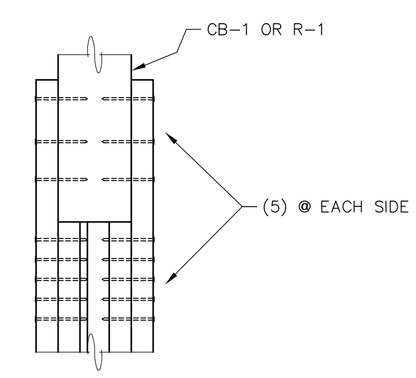

CONN S-3 16-req'd.

20 - 16d NAIL

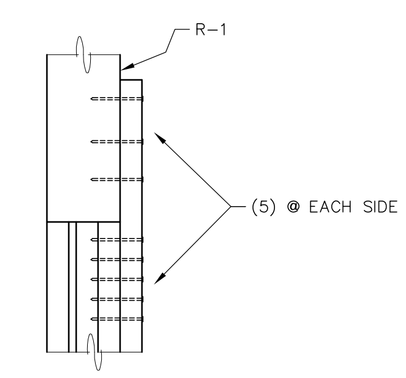

CONN S-3A 2-req'd.

10 - 16d NAIL

THIS PRINT IS THE PROPERTY OF RCP SHELTERS AND IS NOT TO BE USED, COPIED, OR REPRODUCED WITHOUT THEIR EXPRESSED WRITTEN PERMISSION.

LW-G50100-03-ENC-3FSC
COMMUNITY PARK
BOILING SPRINGS, PA

RCP SHELTERS, INC.
2100 SE RAYS WAY STUART, FL 34994
PO BOX 25 STUART, FL 34995-0025
■ SHELTERS ■ PAVILIONS ■ KIOSKS
■ RESTROOMS ■ BANDSHELLS ■ CONCESSIONS ■ MINI-SHELTERS ■ DUGOUTS
Phone 800-525-0207 Fax 772-288-0207
www.rcpshelters.com Email info@rcpshelters.com

RCP

PROJ. NO.:	08-289	
DRAWN:	JLD	11-11-08
CHK'D:	RDS	12-8-08
PLASMA VERIFIED:	YES	12-8-08
REV 1:		
REV 2:		
REV 3:		
REV 4:		
CAD NO.:	7380 R5	
EEC JOB NO.:	7380 R V	
SHEET NO.:	5 OF 8	